CUSTOM HEAT EXCHANGER SPECIFICATION FORM

Heat Exchanger manifolds can be custom fabricated to your specifications. See the examples below of how to mark up and add dimensions on the cores shown to the left below. Give overall maximum space available, including thickness and size of inlet and outlet tubes.

Print Form

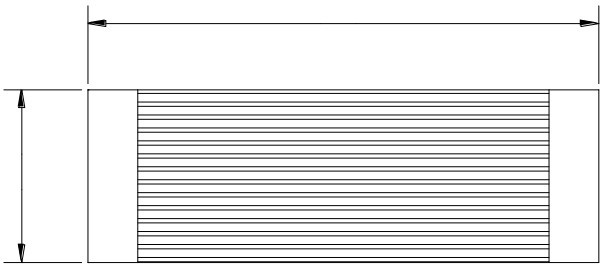

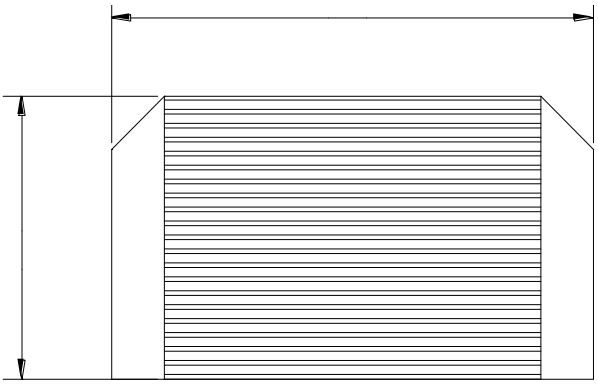

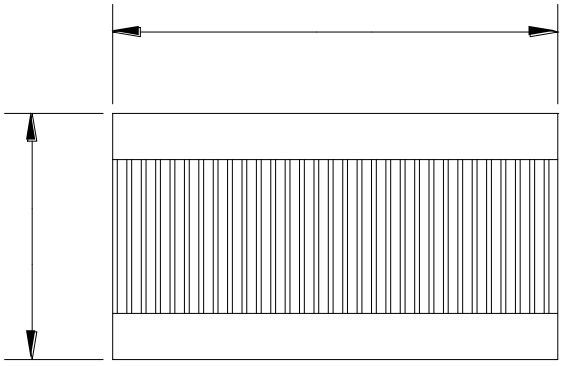

EXAMPLE #1

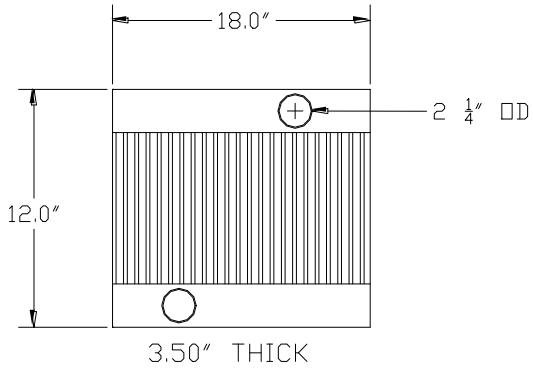

EXAMPLE #2

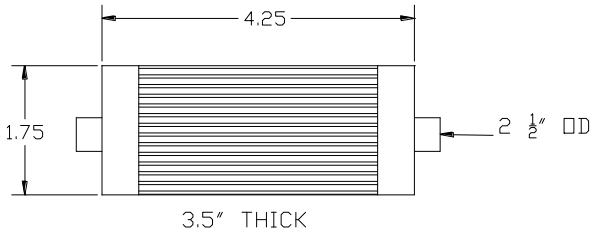

NOTES: